MR16/GU10/PAR16

- low energy consumption
- efficient replacement LED lamps of halogen lamps
- very good color rendering
- no IR- and UV radiation
- especially suitable for public areas like lobbies, corridors and stairwells

MR16

CRI>80&CRI>90

Item	D	C
MR16	50	48

MR16-NON-DIM

Item	Power	Voltage	P.F.	Cap	Lumens	C.C.T	CRI	B.A.	CD	Lifetime	Replace		
MR16C -6W-RA80	6W	12V AC/DC	>0.9	GU5.3	400lm	30K/40K/50K	>80	38°	850cd	25,000 h	35W	–	√
MR16S-7.5W-RA80	7.5W	12V AC/DC	>0.9	GU5.3	600 lm	30K/40K/50K	>80	38°	1250cd	25,000 h	75W	–	–
MR16C -6W-RA90	6W	12V AC/DC	>0.9	GU5.3	360lm	30K/40K/50K	>90	38°	650cd	25,000 h	35W	–	–
MR16S-7.5W-RA90	7.5W	12V AC/DC	>0.9	GU5.3	550 lm	30K/40K/50K	>90	38°	1000cd	25,000 h	75W	–	–

MR16-DIM

Item	Power	Voltage	P.F.	Cap	Lumens	C.C.T	CRI	B.A.	CD	Lifetime	Replace		
MR16C-6W-DIM-RA80	6W	12V AC/DC	>0.9	GU5.3	400lm	30K/40K/50K	>80	38°	850cd	25,000 h	35W	√	√
MR16S-7.5W-DIM-RA80	7.5W	12V AC/DC	>0.9	GU5.3	600 lm	30K/40K/50K	>80	38°	1250cd	25,000 h	75W	√	–
MR16C-6W-DIM-RA90	6W	12V AC/DC	>0.9	GU5.3	360lm	30K/40K/50K	>90	38°	650cd	25,000 h	35W	√	√
MR16S-7.5W-DIM-RA90	7.5W	12V AC/DC	>0.9	GU5.3	550 lm	30K/40K/50K	>90	38°	1000cd	25,000 h	75W	√	–

©LEDUX, all rights reserved.

HIGH CRI MR16-DIM

CRI 98

Item	Power	Voltage	P.F.	Cap	Lumens	C.C.T	CRI	B.A.	CD	Lifetime	Replace		
MR16K -7W-DIM-RA98	7W	12V AC/DC	>0.9	GU5.3	450lm	30K/40K/50K	98	38°	1000cd	25,000 h	35W	√	√

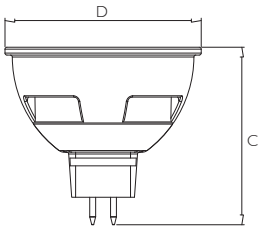

Item	D	C
MR16	50	47

©LEDUX, all rights reserved.

GU10-DIM

CRI>80&CRI>90

Item	D	C
MR16	50	48

Item	Power	Voltage	P.F.	Cap	Lumens	C.C.T	CRI	B.A.	CD	Lifetime	Replace		
GU10 -6 W-DIM-RA80	6W	120V/60Hz	>0.9	GU10	400lm	30K/40K/50K	>80	38°	850cd	25,000 h	60W	√	√
GU10-7.5 W-DIM-RA80	7.5W	120V/60Hz	>0.9	GU10	600 lm	30K/40K/50K	>80	38°	1250cd	25,000 h	75W	√	–
GU10 -6 W-DIM-RA90	6W	120V/60Hz	>0.9	GU10	360lm	30K/40K/50K	>90	38°	650cd	25,000 h	60W	√	–
GU10-7.5 W-DIM-RA90	7.5W	120V/60Hz	>0.9	GU10	550 lm	30K/40K/50K	>90	38°	1000cd	25,000 h	75W	√	–

c UL us LISTED E469504 · UL · FC · ENERGY STAR · lighting facts · LM79 · LM80

GU10E-DIM

Item	Power	Voltage	P.F.	Cap	Lumens	C.C.T	CRI	B.A.	CD	Lifetime	Replace		
GU10E-6W-DIM-RA80	6W	120V/60Hz	>0.7	GU10	400lm	30K/40K/50K	>80	38°	850cd	25,000 h	60W	√	√
GU10S-7.5W-DIM-RA80	7.5W	120V/60Hz	>0.8	GU10	600 lm	30K/40K/50K	>80	38°	1250cd	25,000 h	75W	√	–
GU10E-6W-DIM-RA90	6W	120V/60Hz	>0.7	GU10	360lm	30K/40K/50K	>90	38°	650cd	25,000 h	60W	√	√
GU10S-7.5W-DIM-RA90	7.5W	120V/60Hz	>0.8	GU10	550 lm	30K/40K/50K	>90	38°	1000cd	25,000 h	75W	√	–

c UL us LISTED E469504 · UL · FC · ENERGY STAR · lighting facts · LM79 · LM80

©LEDUX, all rights reserved.

HIGH CRI GU10-DIM

CRI98

Item	Power	Voltage	P.F.	Cap	Lumens	C.C.T	CRI	B.A.	CD	Lifetime	Replace		
GU10K-7W-DIM-RA98	7W	120V/60Hz	>0.9	GU10	450lm	30K/40K/50K	98	38°	850cd	25,000 h	60W	√	√

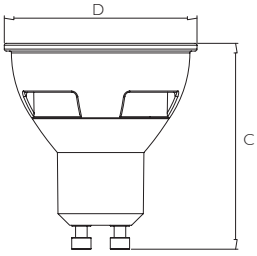

Item	D	C
GU10	50	56

©LEDUX, all rights reserved.

GU10K-DIM

CRI>80&CRI>90

Item	Power	Voltage	P.F.	Cap	Lumens	C.C.T	CRI	B.A.	CD	Lifetime	Replace		
GU10K-6W-DIM-RA80	6W	120V/60Hz	>0.7	GU10	400lm	30K/40K/50K	>80	38°	850cd	25,000 h	60W	√	√
GU10K-6W-DIM-RA90	6W	120V/60Hz	>0.7	GU10	360lm	30K/40K/50K	>80	38°	750cd	25,000 h	60W	√	√

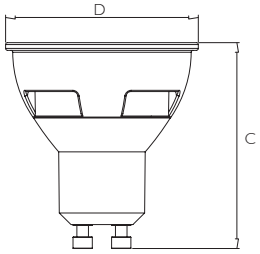

Item	D	C
GU10K	50	56

©LEDUX, all rights reserved.

PAR16-DIM

CRI>80&CRI>90

Item	D	C
PAR16	50	66

Item	Power	Voltage	P.F.	Cap	Lumens	C.C.T	CRI	B.A.	CD	Lifetime	Replace		
PAR16-6W-DIM-RA80	6W	120V/60Hz	>0.9	E26	400lm	30K/40K/50K	>80	38°	850cd	25,000 h	60W	√	√
PAR16-7.5W-DIM-RA80	7.5W	120V/60Hz	>0.9	E26	600 lm	30K/40K/50K	>80	38°	1250cd	25,000 h	75W	√	–
PAR16 -6W-DIM-RA90	6W	120V/60Hz	>0.9	E26	360lm	30K/40K/50K	>90	38°	650cd	25,000 h	60W	√	–
PAR16 -7.5W-DIM-RA90	7.5W	120V/60Hz	>0.9	E26	550 lm	30K/40K/50K	>90	38°	1000cd	25,000 h	75W	√	–

PAR16E -DIM

Item	Power	Voltage	P.F.	Cap	Lumens	C.C.T	CRI	B.A.	CD	Lifetime	Replace		
PAR16E-7.5W-DIM-RA80	6W	120V/60Hz	>0.7	E26	400lm	30K/40K/50K	>80	38°	850cd	25,000 h	60W	√	√
PAR16S-7.5W-DIM-RA80	7.5W	120V/60Hz	>0.7	E26	600 lm	30K/40K/50K	>80	38°	1250cd	25,000 h	75W	√	–
PAR16E -6W-DIM-RA90	6W	120V/60Hz	>0.7	E26	360lm	30K/40K/50K	>90	38°	650cd	25,000 h	60W	√	√
PAR16S -7.5W-DIM-RA90	7.5W	120V/60Hz	>0.7	E26	550 lm	30K/40K/50K	>90	38°	1000cd	25,000 h	75W	√	–

©LEDUX, all rights reserved.

HIGH CRI PAR16-DIM

CRI98

Item	Power	Voltage	P.F.	Cap	Lumens	C.C.T	CRI	B.A.	CD	Lifetime	Replace		
PAR16K -7W-DIM-RA98	7W	120V/60Hz	>0.9	E26	450lm	30K/40K/50K	98	38°	850cd	25,000 h	60W	√	√

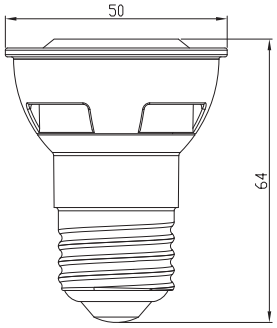

Item	D	C
PAR16	50	64

©LEDUX, all rights reserved.

PAR16K

CRI>80&CRI>90

Item	Power	Voltage	P.F.	Cap	Lumens	C.C.T	CRI	B.A.	CD	Lifetime	Replace		
PAR16K-6W-DIM-RA80	6W	120V/60Hz	>0.7	GU10	400lm	30K/40K/50K	>80	38°	850cd	25,000 h	60W	√	√
PAR16K-6W-DIM-RA90	6W	120V/60Hz	>0.7	GU10	360lm	30K/40K/50K	>80	38°	850cd	25,000 h	60W	√	√

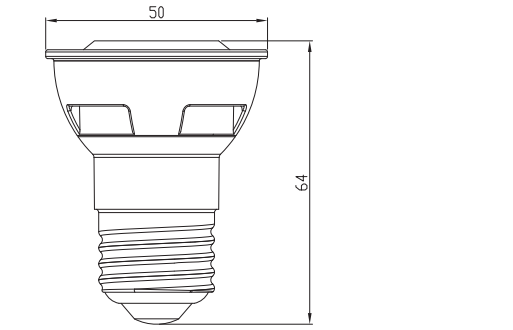

Item	D	C
PAR16K	50	64

©LEDUX, all rights reserved.